William Stallings
Computer Organization and Architecture
10th Edition

© 2016 Pearson Education, Inc., Hoboken, NJ. All rights reserved.

Chapter 5
Internal Memory

© 2016 Pearson Education, Inc., Hoboken, NJ. All rights reserved.

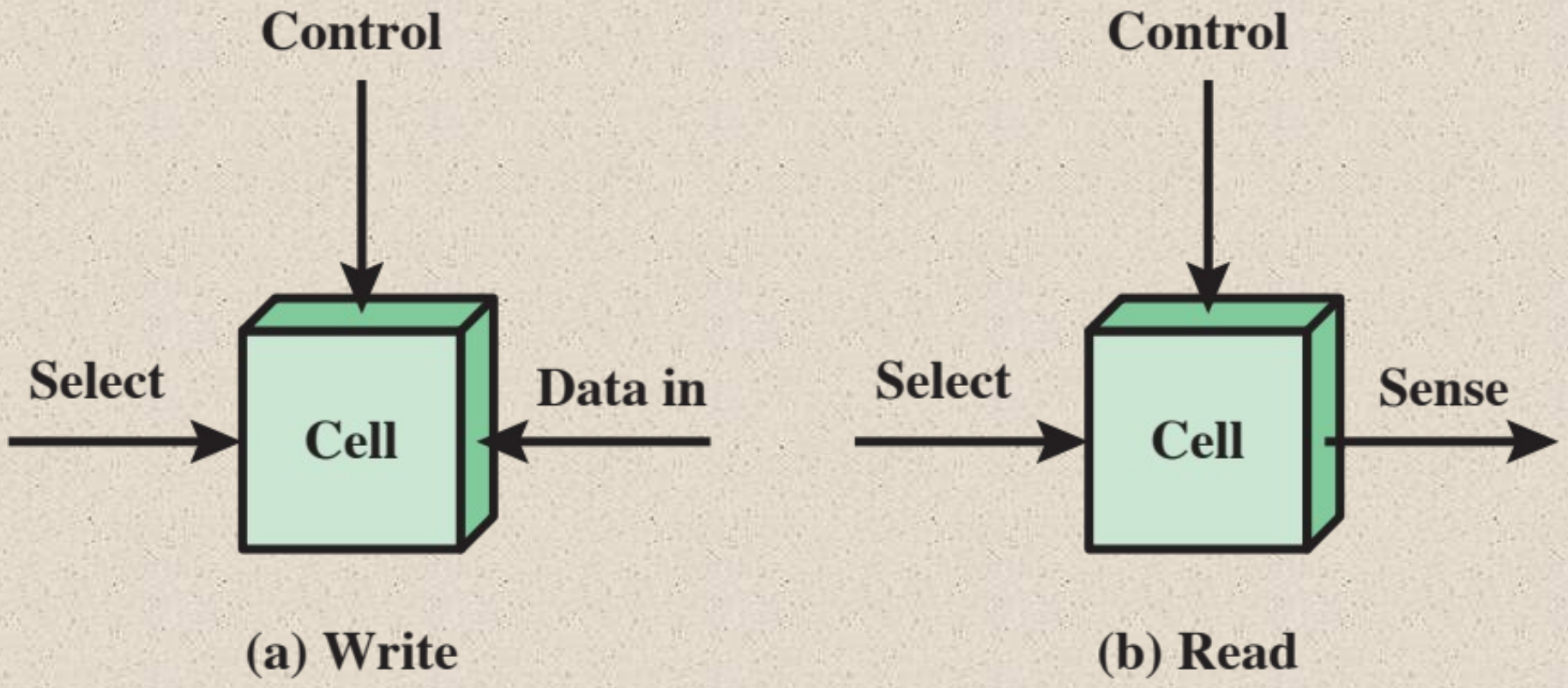

Figure 5.1 Memory Cell Operation

© 2016 Pearson Education, Inc., Hoboken, NJ. All rights reserved.

Memory Type	Category	Erasure	Write Mechanism	Volatility
Random-access memory (RAM)	Read-write memory	Electrically, byte-level	Electrically	Volatile
Read-only memory (ROM)	Read-only memory	Not possible	Masks	Nonvolatile
Programmable ROM (PROM)				
Erasable PROM (EPROM)	Read-mostly memory	UV light, chip-level	Electrically	
Electrically Erasable PROM (EEPROM)		Electrically, byte-level		
Flash memory		Electrically, block-level		

Table 5.1
Semiconductor Memory Types

© 2016 Pearson Education, Inc., Hoboken, NJ. All rights reserved.

Dynamic RAM (DRAM)

- RAM technology is divided into two technologies:
  - Dynamic RAM (DRAM)
  - Static RAM (SRAM)
- DRAM
  - Made with cells that store data as charge on capacitors
  - Presence or absence of charge in a capacitor is interpreted as a binary 1 or 0
  - Requires periodic charge refreshing to maintain data storage
  - The term *dynamic* refers to tendency of the stored charge to leak away, even with power continuously applied

© 2016 Pearson Education, Inc., Hoboken, NJ. All rights reserved.

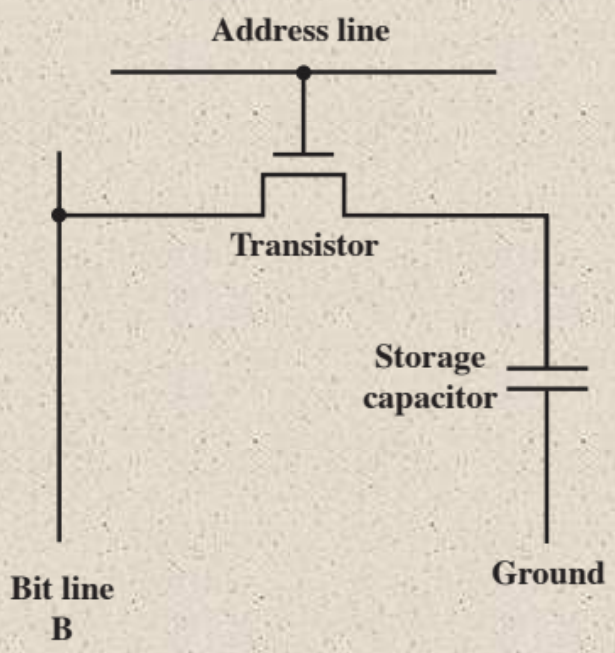

(a) Dynamic RAM (DRAM) cell

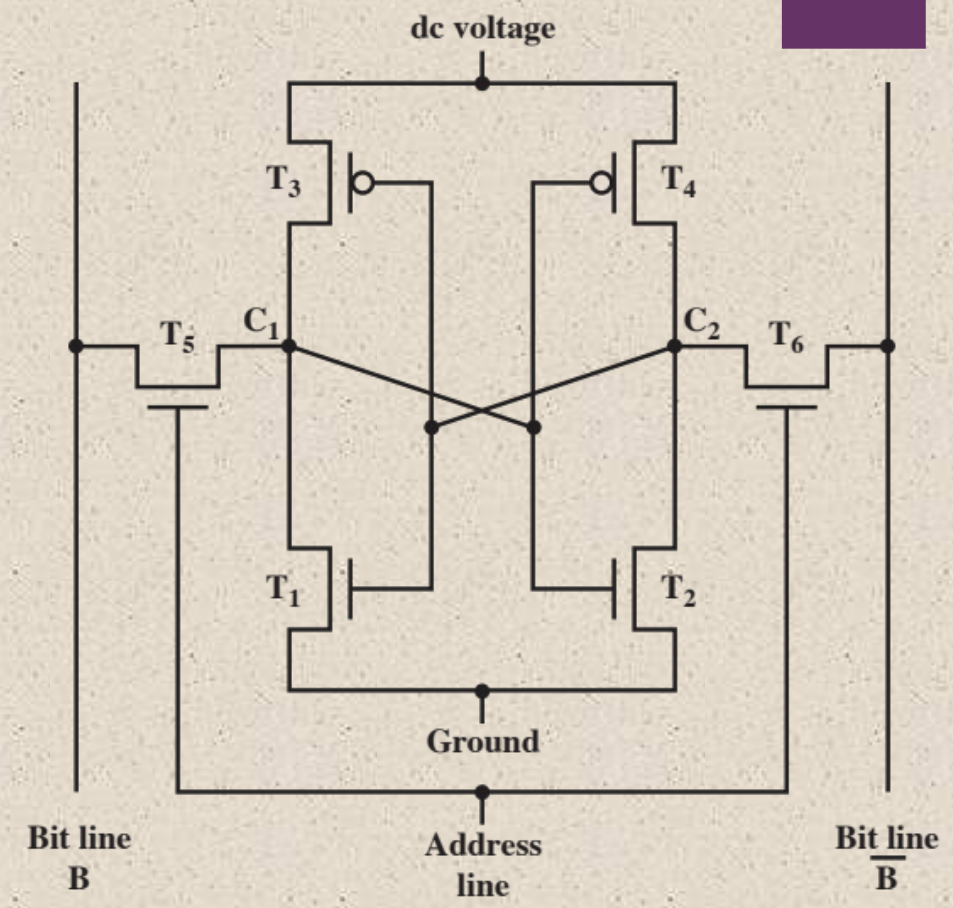

(b) Static RAM (SRAM) cell

Figure 5.2 Typical Memory Cell Structures

© 2016 Pearson Education, Inc., Hoboken, NJ. All rights reserved.

Static RAM (SRAM)

- Digital device that uses the same logic elements used in the processor
- Binary values are stored using traditional flip-flop logic gate configurations
- Will hold its data as long as power is supplied to it

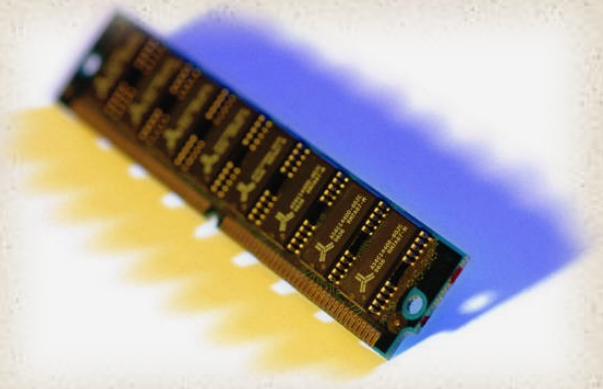

© 2016 Pearson Education, Inc., Hoboken, NJ. All rights reserved.

SRAM versus DRAM

- Both volatile
  - Power must be continuously supplied to the memory to preserve the bit values
- Dynamic cell
  - Simpler to build, smaller
  - More dense (smaller cells = more cells per unit area)
  - Less expensive
  - Requires the supporting refresh circuitry
  - Tend to be favored for large memory requirements
  - Used for main memory
- Static
  - Faster
  - Used for cache memory (both on and off chip)

SRAM

DRAM

© 2016 Pearson Education, Inc., Hoboken, NJ. All rights reserved.

Read Only Memory (ROM)

- Contains a permanent pattern of data that cannot be changed or added to
- No power source is required to maintain the bit values in memory
- Data or program is permanently in main memory and never needs to be loaded from a secondary storage device
- Data is actually wired into the chip as part of the fabrication process
  - Disadvantages of this:
    - No room for error, if one bit is wrong the whole batch of ROMs must be thrown out
    - Data insertion step includes a relatively large fixed cost

© 2016 Pearson Education, Inc., Hoboken, NJ. All rights reserved.

Programmable ROM (PROM)

- Less expensive alternative
- Nonvolatile and may be written into only once
- Writing process is performed electrically and may be performed by supplier or customer at a time later than the original chip fabrication
- Special equipment is required for the writing process
- Provides flexibility and convenience
- Attractive for high volume production runs

© 2016 Pearson Education, Inc., Hoboken, NJ. All rights reserved.

Read-Mostly Memory

EPROM

- Erasable programmable read-only memory
- Erasure process can be performed repeatedly
- More expensive than PROM but it has the advantage of the multiple update capability

EEPROM

- Electrically erasable programmable read-only memory
- Can be written into at any time without erasing prior contents
- Combines the advantage of non-volatility with the flexibility of being updatable in place
- More expensive than EPROM

Flash Memory

- Intermediate between EPROM and EEPROM in both cost and functionality
- Uses an electrical erasing technology, does not provide byte-level erasure
- Microchip is organized so that a section of memory cells are erased in a single action or “flash”

© 2016 Pearson Education, Inc., Hoboken, NJ. All rights reserved.

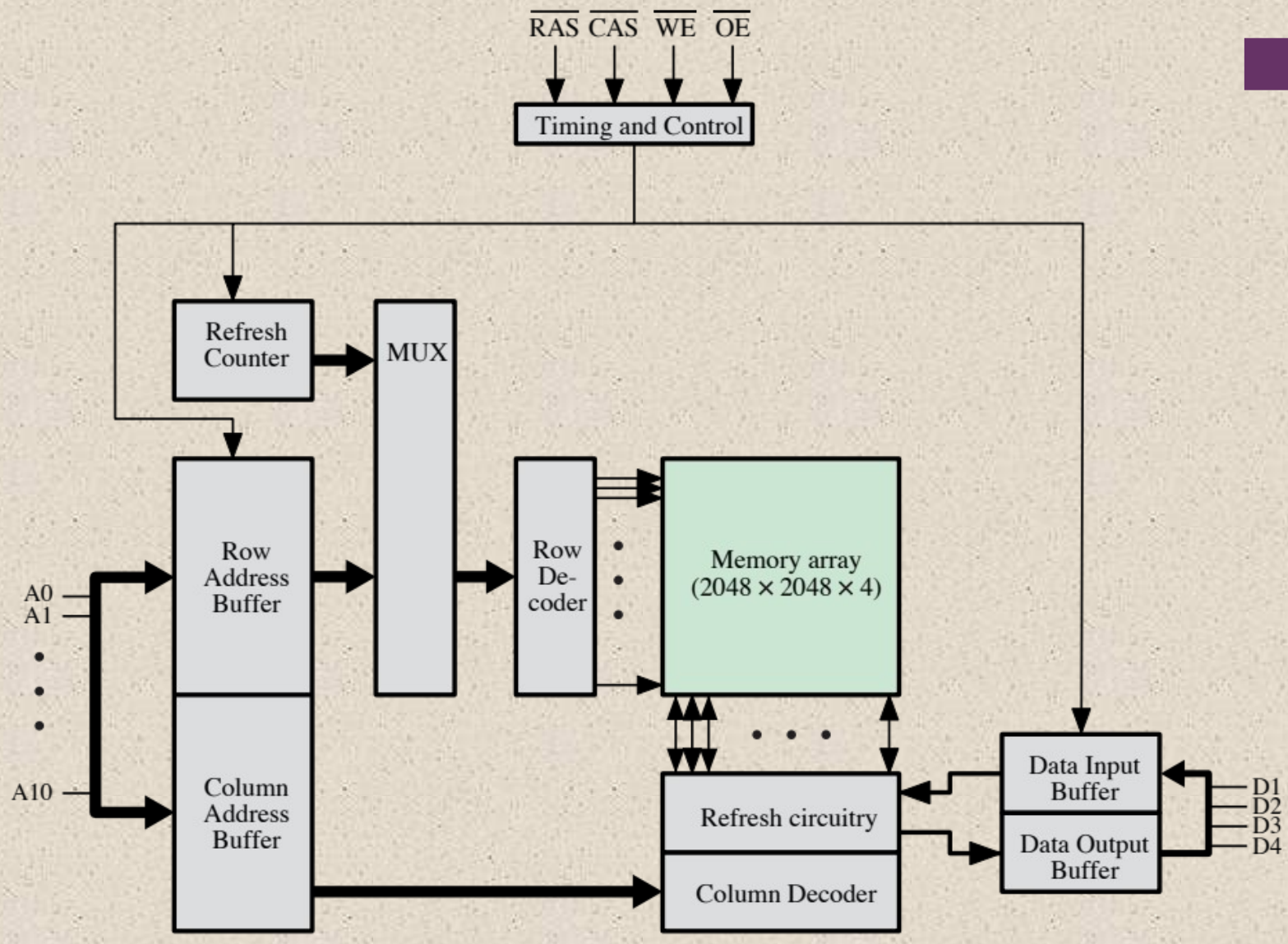

Figure 5.3 Typical 16 Megabit DRAM (4M × 4)

© 2016 Pearson Education, Inc., Hoboken, NJ. All rights reserved.

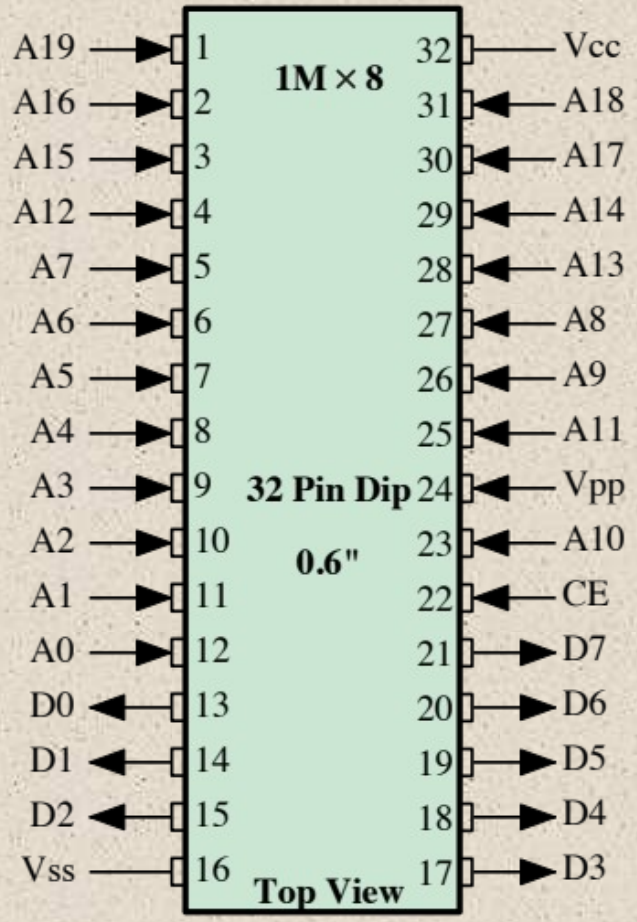

(a) 8 Mbit EPROM

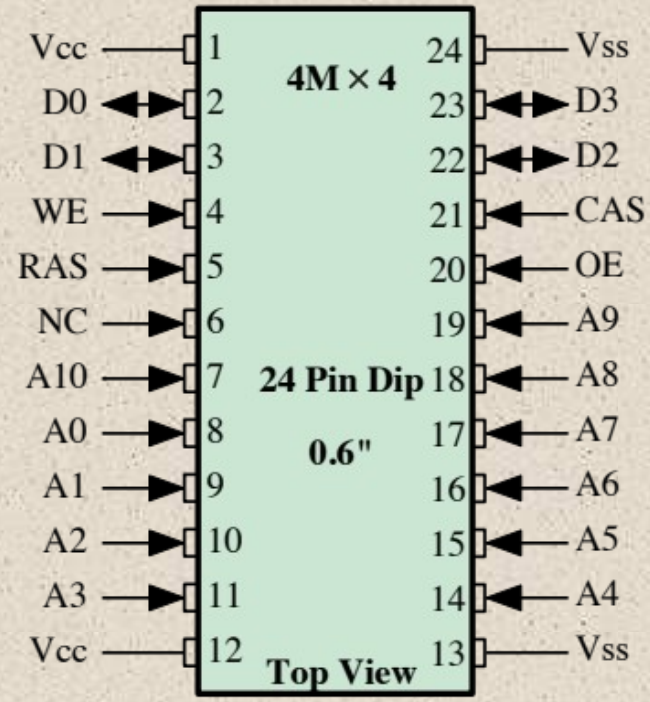

(b) 16 Mbit DRAM

Figure 5.4 Typical Memory Package Pins and Signals

© 2016 Pearson Education, Inc., Hoboken, NJ. All rights reserved.

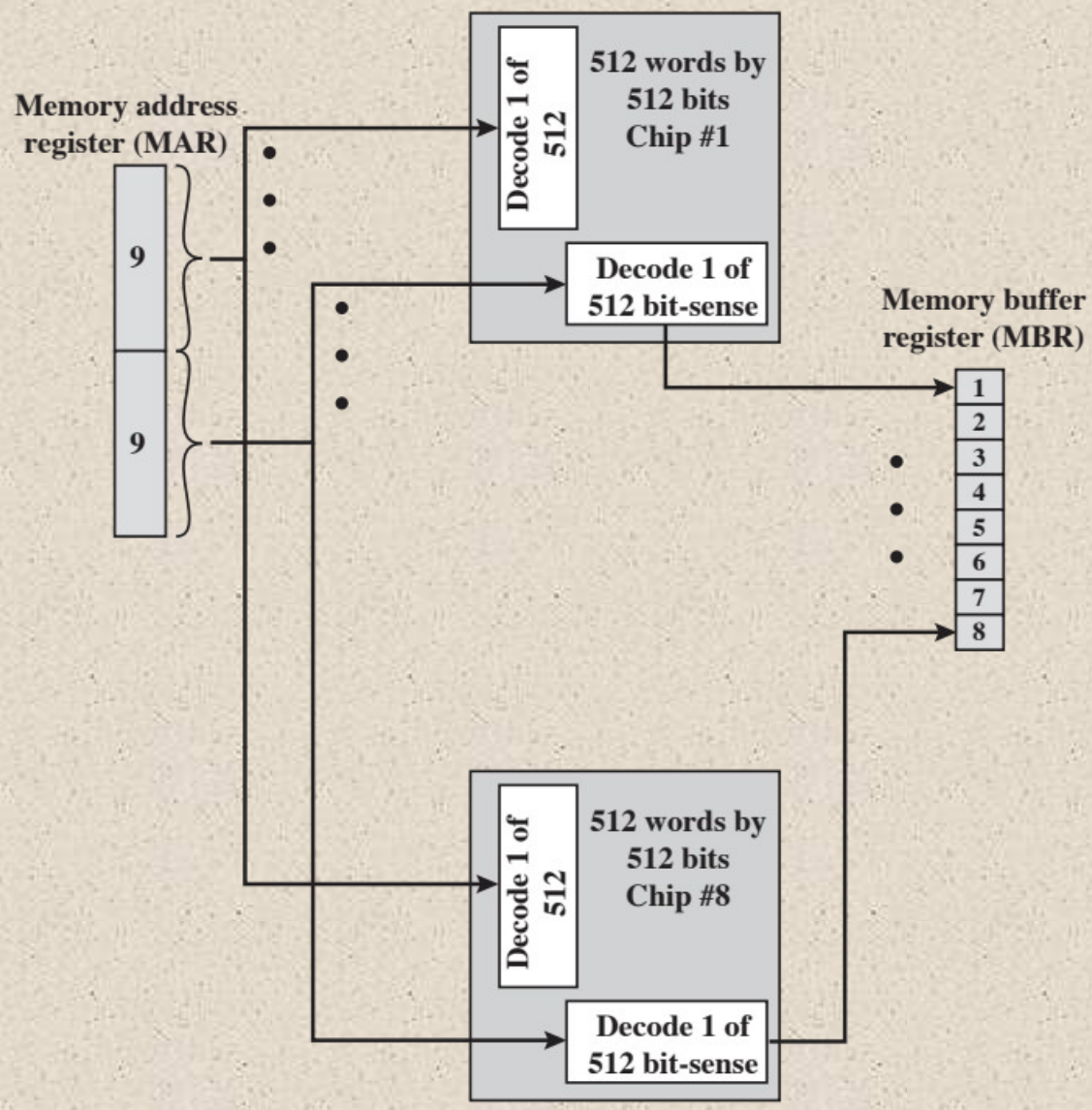

Figure 5.5 256-KByte Memory Organization

© 2016 Pearson Education, Inc., Hoboken, NJ. All rights reserved.

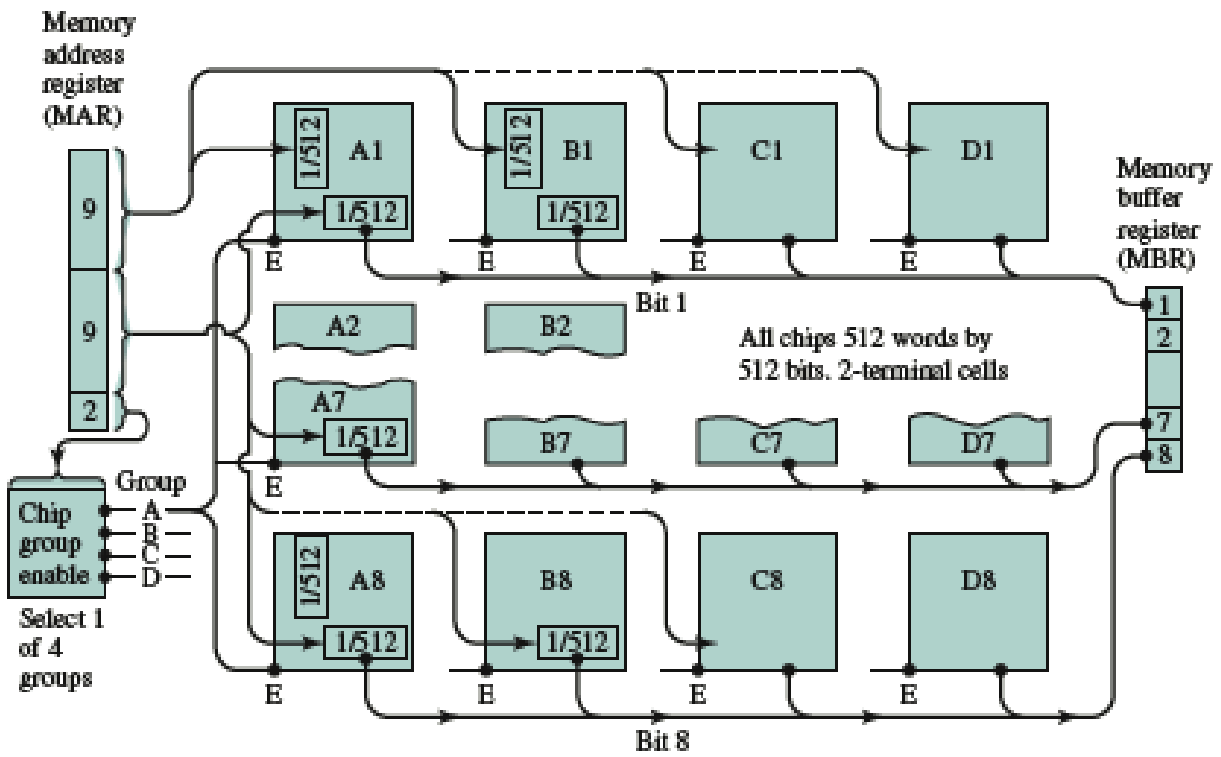

Figure 5.6 1-Mbyte Memory Organization

© 2016 Pearson Education, Inc., Hoboken, NJ. All rights reserved.

Interleaved Memory

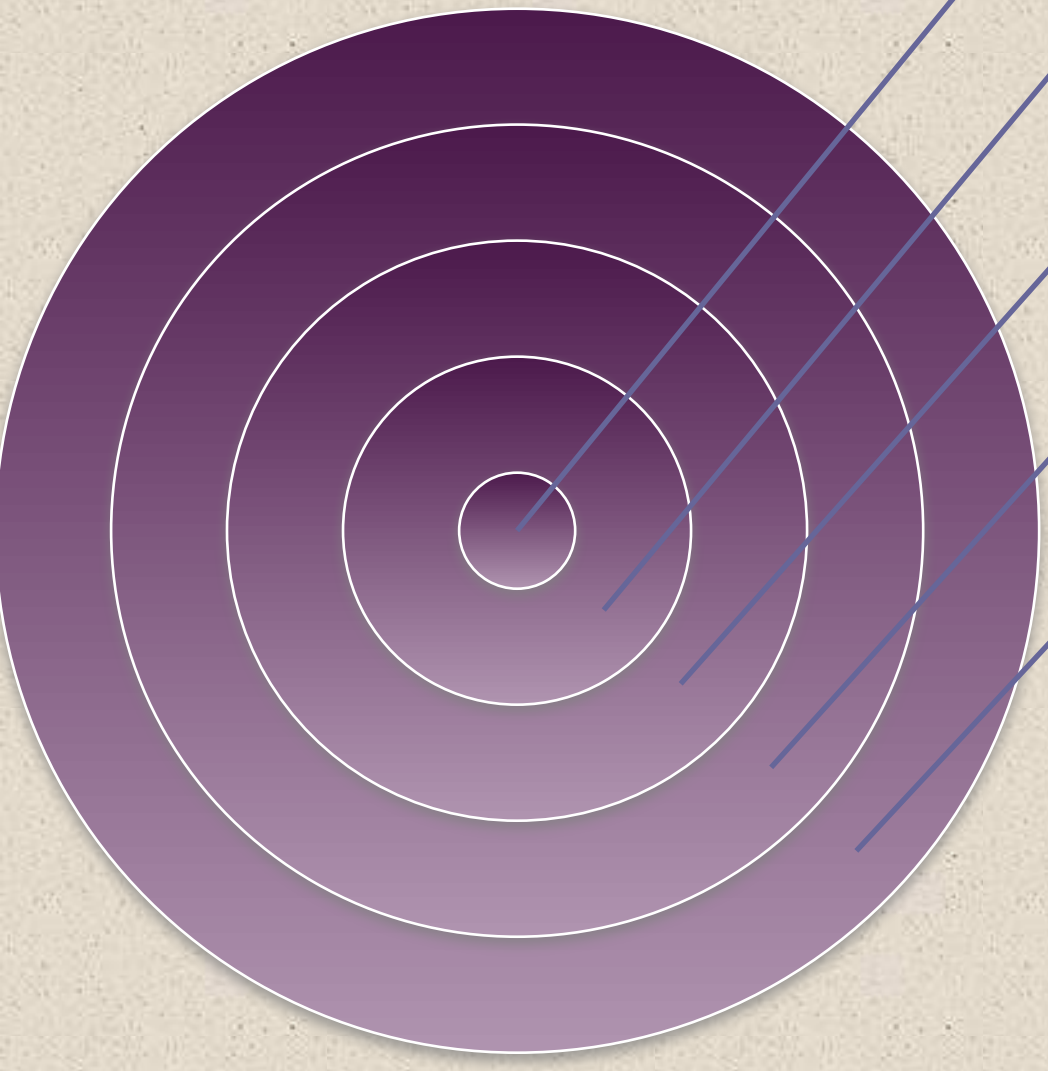

Composed of a collection of DRAM chips

Grouped together to form a *memory bank*

Each bank is independently able to service a memory read or write request

K banks can service *K* requests simultaneously, increasing memory read or write rates by a factor of *K*

If consecutive words of memory are stored in different banks, the transfer of a block of memory is speeded up

© 2016 Pearson Education, Inc., Hoboken, NJ. All rights reserved.

Error Correction

- Hard Failure
  - Permanent physical defect
  - Memory cell or cells affected cannot reliably store data but become stuck at 0 or 1 or switch erratically between 0 and 1
  - Can be caused by:
    - Harsh environmental abuse
    - Manufacturing defects
    - Wear
- Soft Error
  - Random, non-destructive event that alters the contents of one or more memory cells
  - No permanent damage to memory
  - Can be caused by:
    - Power supply problems
    - Alpha particles

© 2016 Pearson Education, Inc., Hoboken, NJ. All rights reserved.

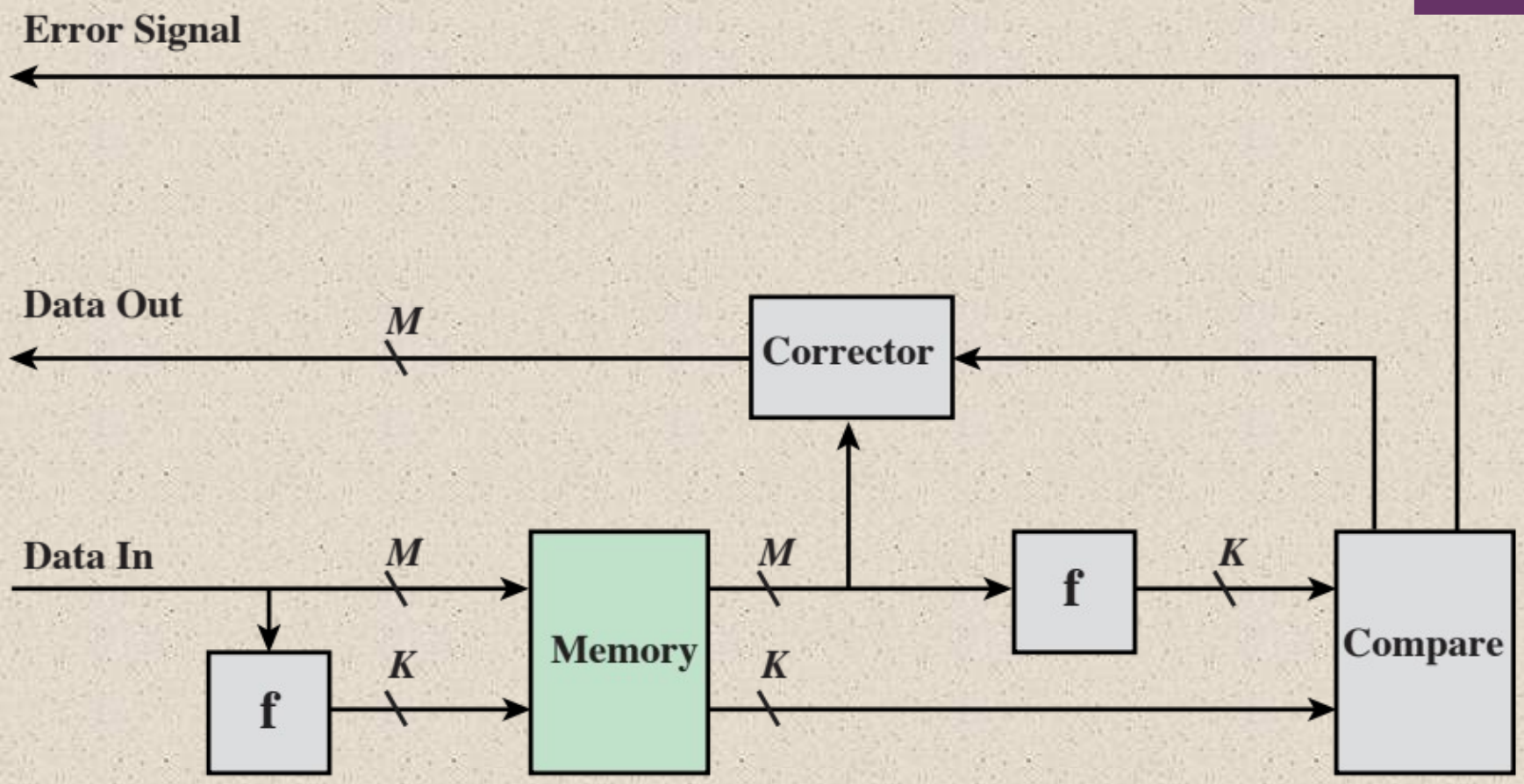

Figure 5.7 Error-Correcting Code Function

© 2016 Pearson Education, Inc., Hoboken, NJ. All rights reserved.

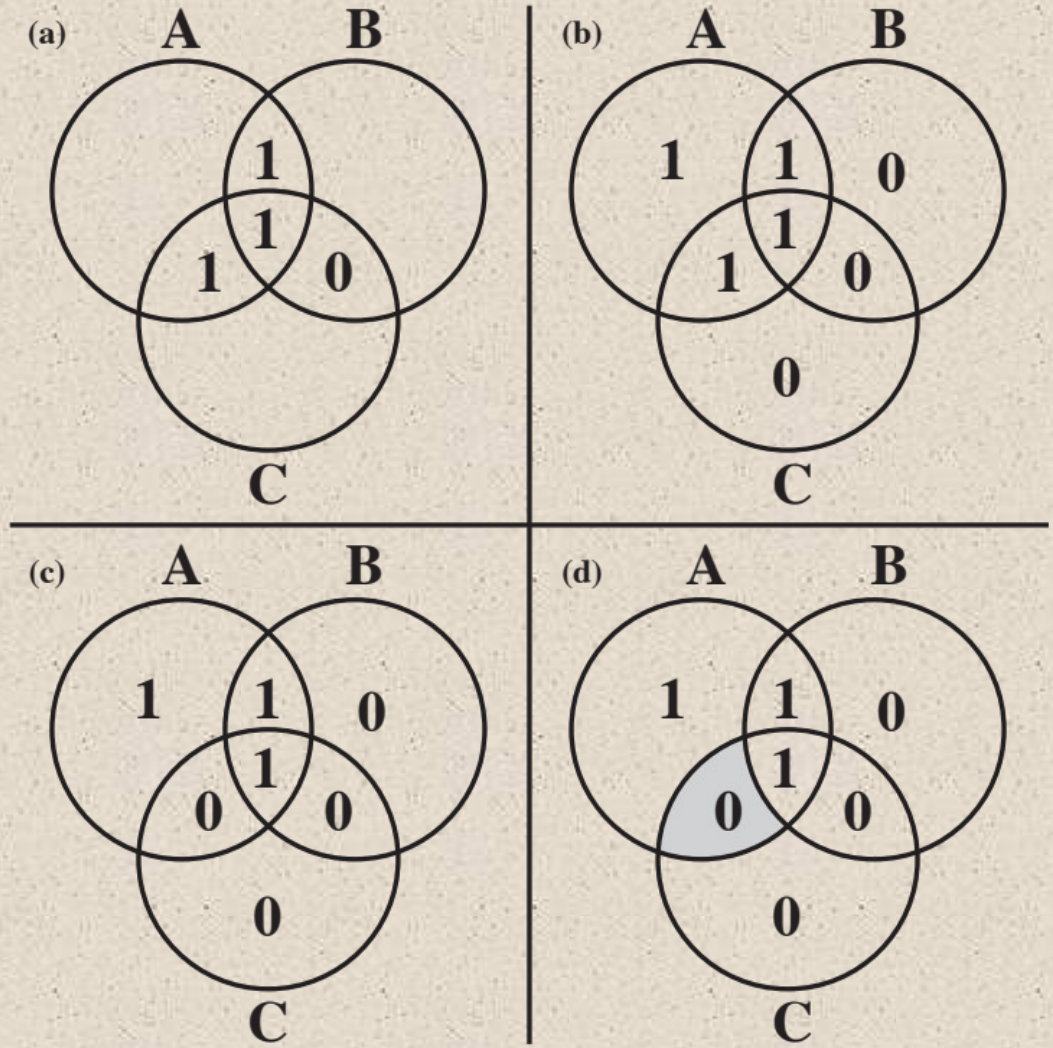

Figure 5.8 Hamming Error-Correcting Code

© 2016 Pearson Education, Inc., Hoboken, NJ. All rights reserved.

	Single-Error Correction		Single-Error Correction/ Double-Error Detection	
Data Bits	Check Bits	% Increase	Check Bits	% Increase
8	4	50	5	62.5
16	5	31.25	6	37.5
32	6	18.75	7	21.875
64	7	10.94	8	12.5
128	8	6.25	9	7.03
256	9	3.52	10	3.91

Table 5.2
Increase in Word Length with Error Correction

© 2016 Pearson Education, Inc., Hoboken, NJ. All rights reserved.

Bit Position	12	11	10	9	8	7	6	5	4	3	2	1
Position Number	1100	1011	1010	1001	1000	0111	0110	0101	0100	0011	0010	0001
Data Bit	D8	D7	D6	D5		D4	D3	D2		D1		
Check Bit					C8				C4		C2	C1

Figure 5.9 Layout of Data Bits and Check Bits

© 2016 Pearson Education, Inc., Hoboken, NJ. All rights reserved.

Bit position	12	11	10	9	8	7	6	5	4	3	2	1
Position number	1100	1011	1010	1001	1000	0111	0110	0101	0100	0011	0010	0001
Data bit	D8	D7	D6	D5		D4	D3	D2		D1		
Check bit					C8				C4		C2	C1
Word stored as	0	0	1	1	0	1	0	0	1	1	1	1
Word fetched as	0	0	1	1	0	1	1	0	1	1	1	1
Position Number	1100	1011	1010	1001	1000	0111	0110	0101	0100	0011	0010	0001
Check Bit					0				0		0	1

Figure 5.10 Check Bit Calculation

© 2016 Pearson Education, Inc., Hoboken, NJ. All rights reserved.

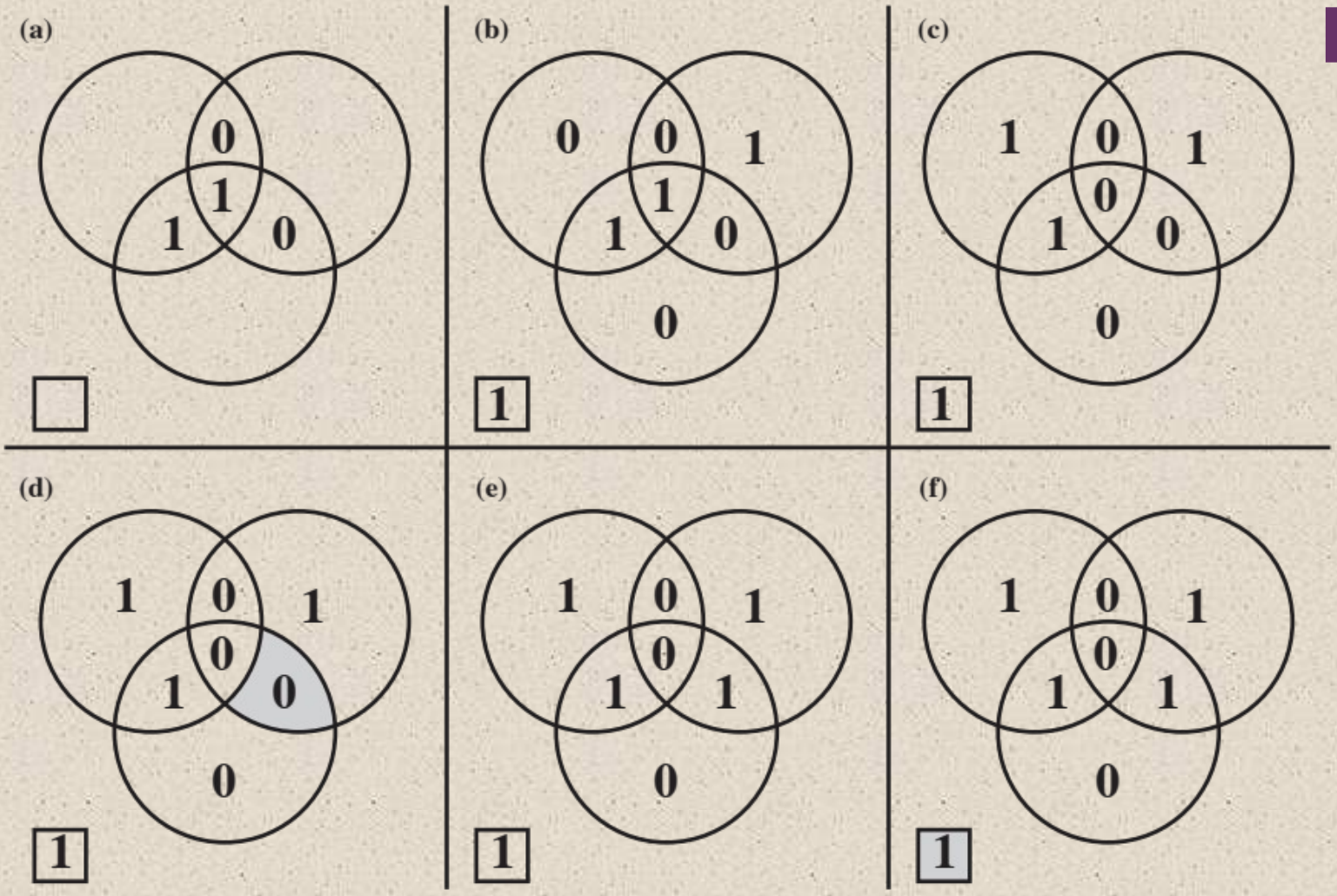

Figure 5.11 Hamming SEC-DED Code

© 2016 Pearson Education, Inc., Hoboken, NJ. All rights reserved.

Advanced DRAM Organization

SDRAM

DDR-DRAM

RDRAM

- One of the most critical system bottlenecks when using high-performance processors is the interface to main internal memory
- The traditional DRAM chip is constrained both by its internal architecture and by its interface to the processor's memory bus
- A number of enhancements to the basic DRAM architecture have been explored
  - The schemes that currently dominate the market are SDRAM and DDR-DRAM

© 2016 Pearson Education, Inc., Hoboken, NJ. All rights reserved.

Synchronous DRAM (SDRAM)

One of the most widely used forms of DRAM

Exchanges data with the processor synchronized to an external clock signal and running at the full speed of the processor/memory bus without imposing wait states

With synchronous access the DRAM moves data in and out under control of the system clock

- The processor or other master issues the instruction and address information which is latched by the DRAM
- The DRAM then responds after a set number of clock cycles
- Meanwhile the master can safely do other tasks while the SDRAM is processing

© 2016 Pearson Education, Inc., Hoboken, NJ. All rights reserved.

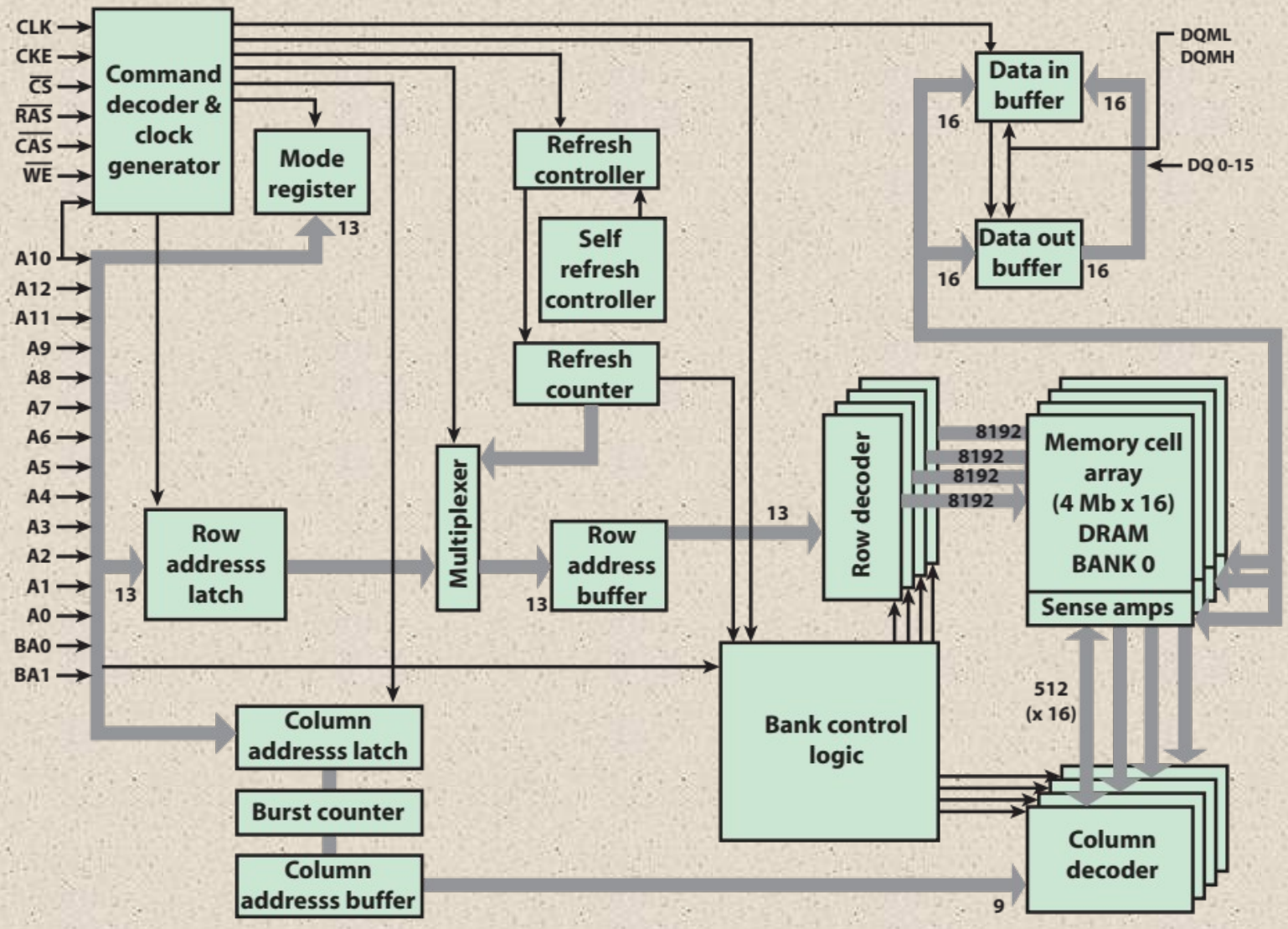

Figure 5.12 256-Mb Synchronous Dynamic RAM (SDRAM)

© 2016 Pearson Education, Inc., Hoboken, NJ. All rights reserved.

A0 to A12	Address inputs
BA0, BA1	Bank address lines
CLK	Clock input
CKE	Clock enable
$\overline{CS}$	Chip select
$\overline{RAS}$	Row address strobe
$\overline{CAS}$	Column address strobe
$\overline{WE}$	Write enable
DQ0 to DQ15	Data input/output
DQM	Data mask

Table 5.3

SDRAM Pin Assignments

© 2016 Pearson Education, Inc., Hoboken, NJ. All rights reserved.

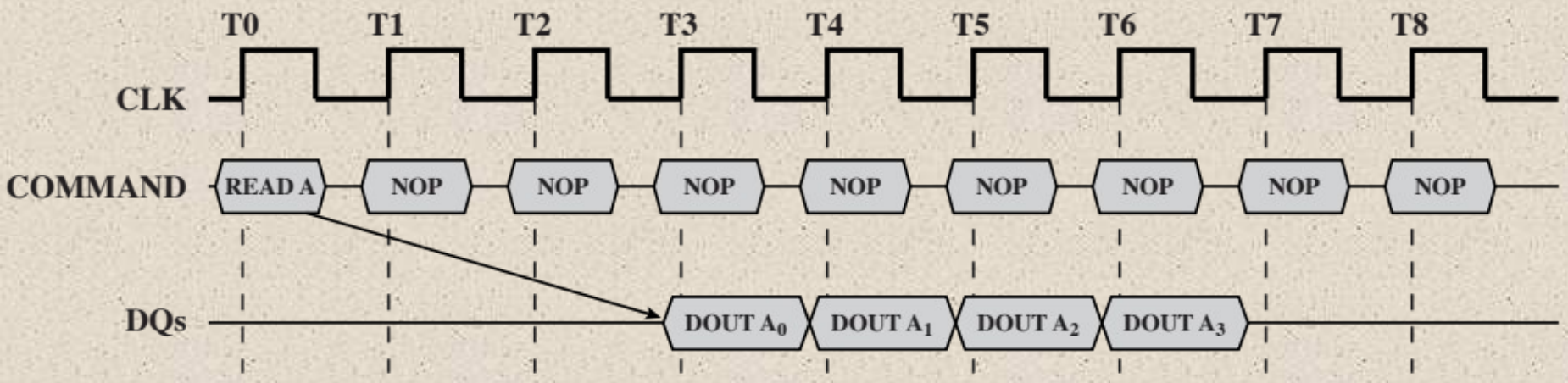

Figure 5.13 SDRAM Read Timing (Burst Length = 4, $\overline{\text{CAS}}$ latency = 2)

© 2016 Pearson Education, Inc., Hoboken, NJ. All rights reserved.

Double Data Rate SDRAM (DDR SDRAM)

- Developed by the JEDEC Solid State Technology Association (Electronic Industries Alliance's semiconductor-engineering-standardization body)
- Numerous companies make DDR chips, which are widely used in desktop computers and servers
- DDR achieves higher data rates in three ways:
  - First, the data transfer is synchronized to both the rising and falling edge of the clock, rather than just the rising edge
  - Second, DDR uses higher clock rate on the bus to increase the transfer rate
  - Third, a buffering scheme is used

© 2016 Pearson Education, Inc., Hoboken, NJ. All rights reserved.

	DDR1	DDR2	DDR3	DDR4
Prefetch buffer (bits)	2	4	8	8
Voltage level (V)	2.5	1.8	1.5	1.2
Front side bus data rates (Mbps)	200—400	400—1066	800—2133	2133—4266

Table 5.4
DDR Characteristics

© 2016 Pearson Education, Inc., Hoboken, NJ. All rights reserved.

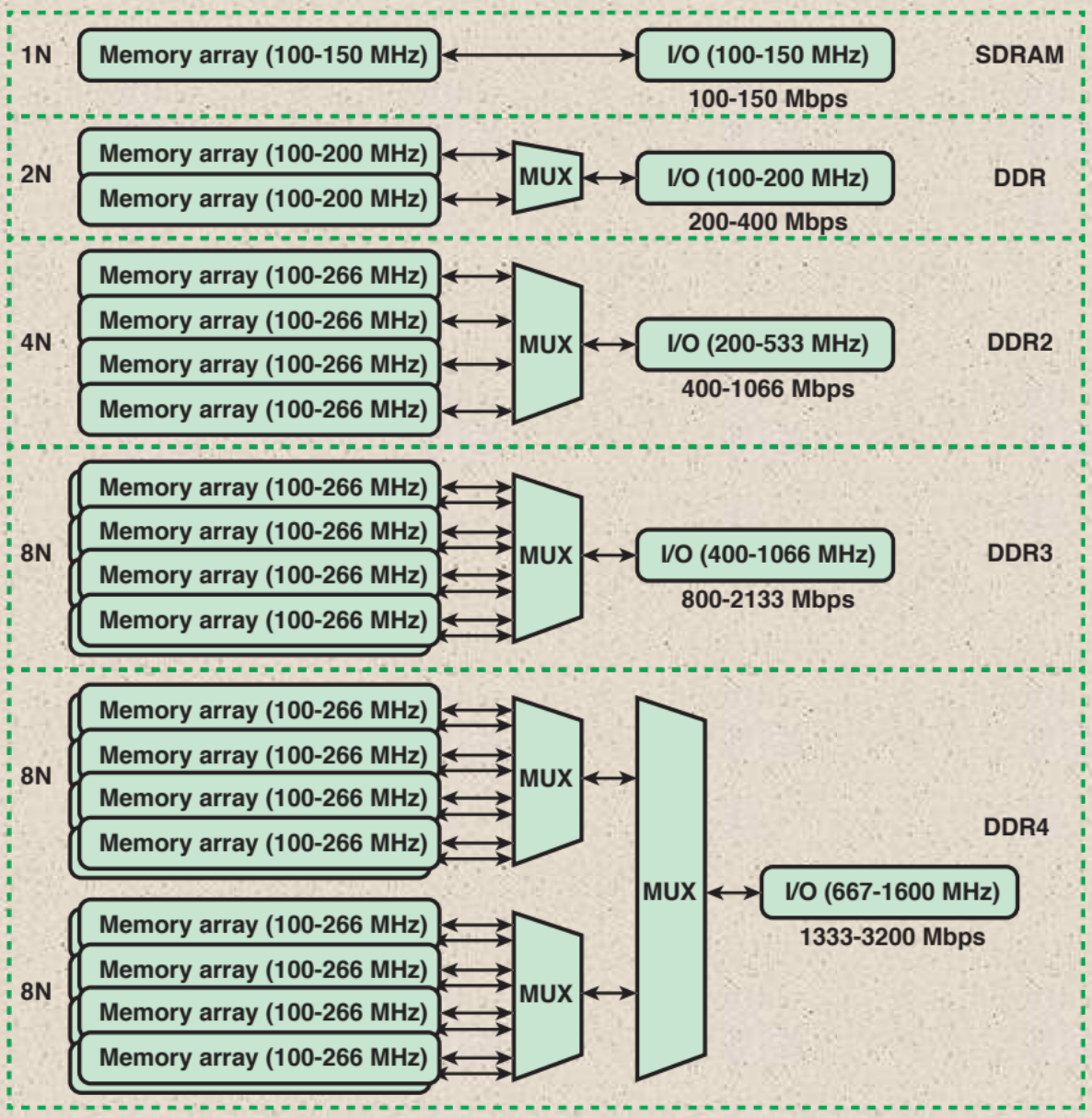

Figure 5.14 DDR Generations

© 2016 Pearson Education, Inc., Hoboken, NJ. All rights reserved.

Flash Memory

- Used both for internal memory and external memory applications
- First introduced in the mid-1980's
- Is intermediate between EPROM and EEPROM in both cost and functionality
- Uses an electrical erasing technology like EEPROM
- It is possible to erase just blocks of memory rather than an entire chip
- Gets its name because the microchip is organized so that a section of memory cells are erased in a single action
- Does not provide byte-level erasure
- Uses only one transistor per bit so it achieves the high density of EPROM

© 2016 Pearson Education, Inc., Hoboken, NJ. All rights reserved.

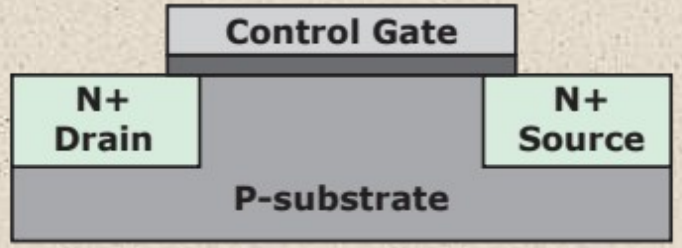

(a) Transistor structure

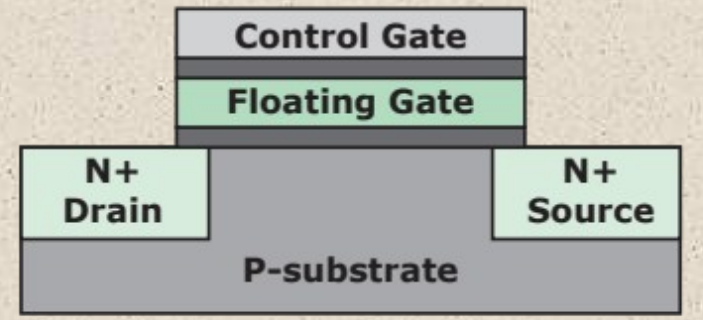

(b) Flash memory cell in one state

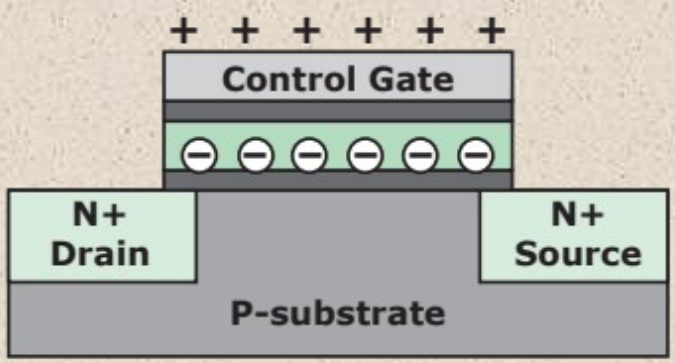

(c) Flash memory cell in zero state

Figure 5.15 Flash Memory Operation

© 2016 Pearson Education, Inc., Hoboken, NJ. All rights reserved.

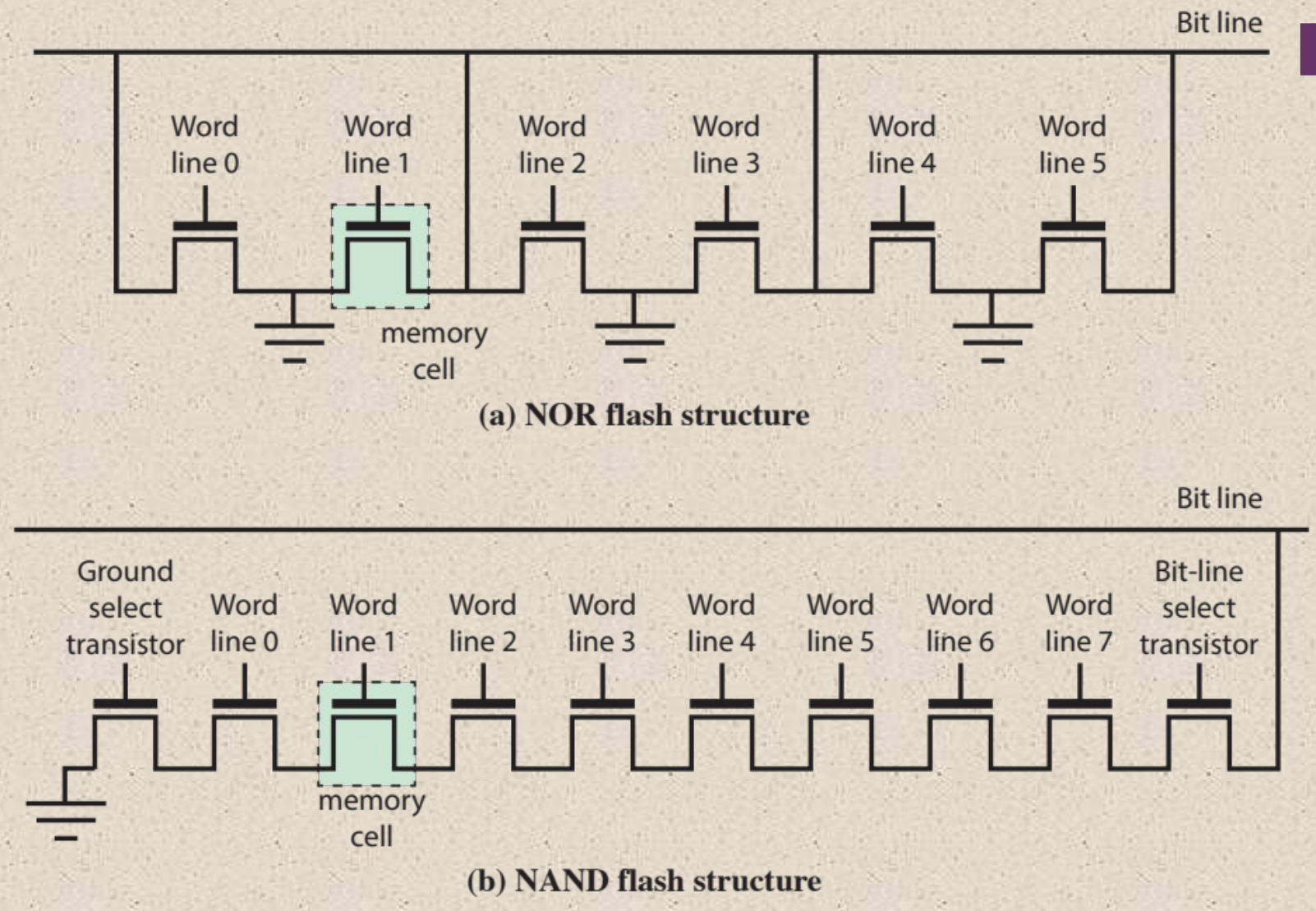

Figure 5.16 Flash Memory Structures

© 2016 Pearson Education, Inc., Hoboken, NJ. All rights reserved.

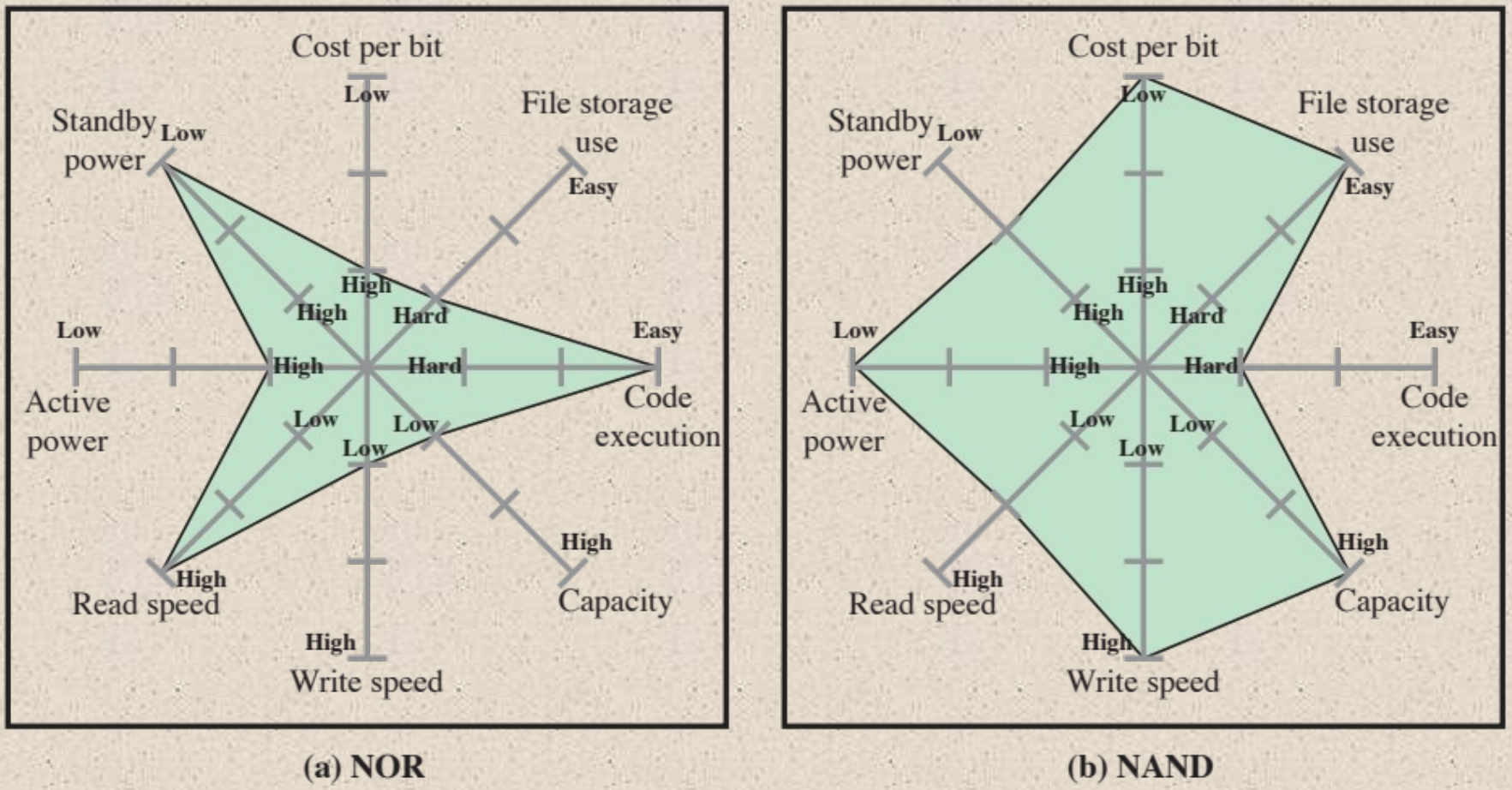

Figure 5.17 Kiviat Graphs for Flash Memory

© 2016 Pearson Education, Inc., Hoboken, NJ. All rights reserved.

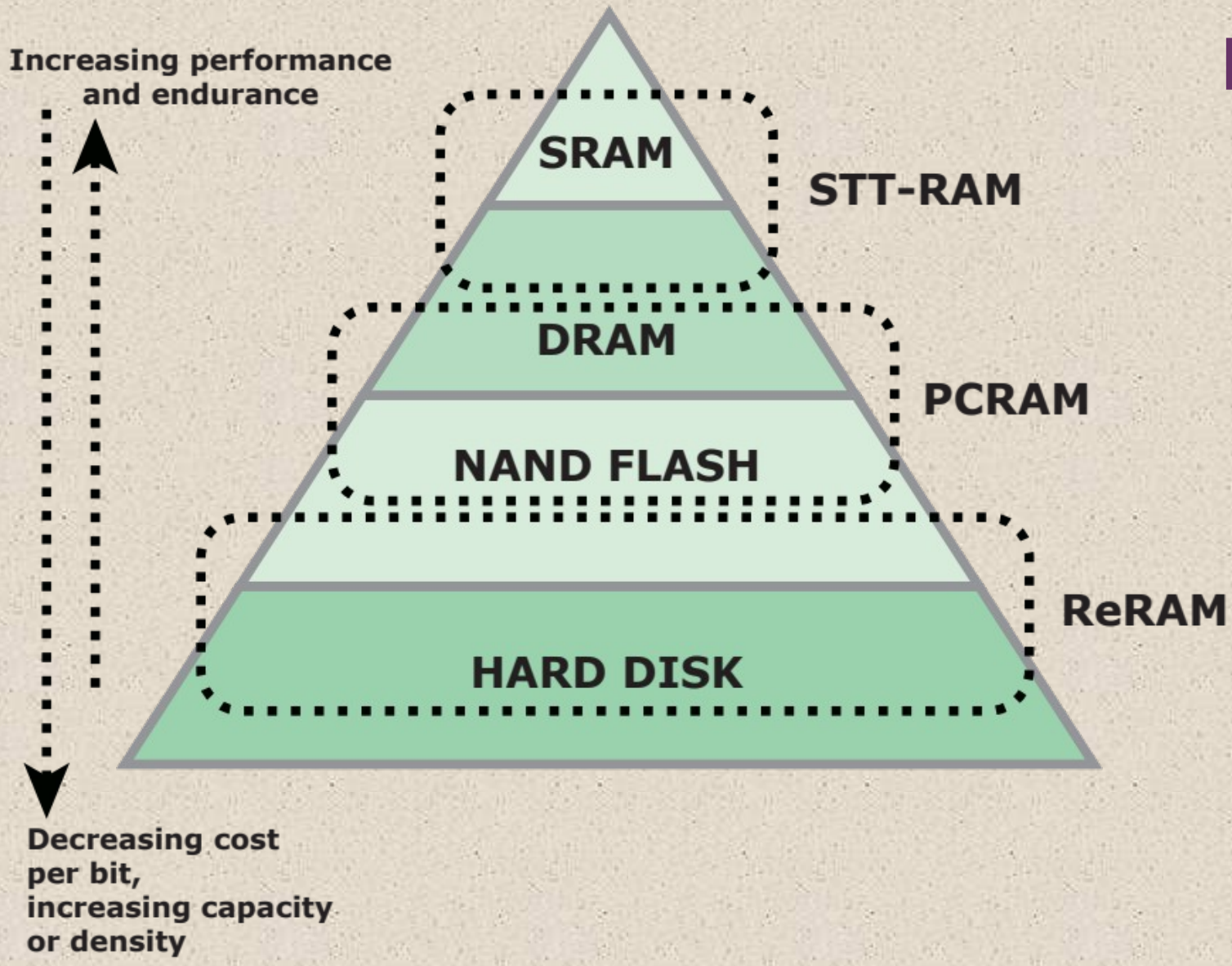

Figure 5.18 Nonvolatile RAM within the Memory Hierarchy

© 2016 Pearson Education, Inc., Hoboken, NJ. All rights reserved.

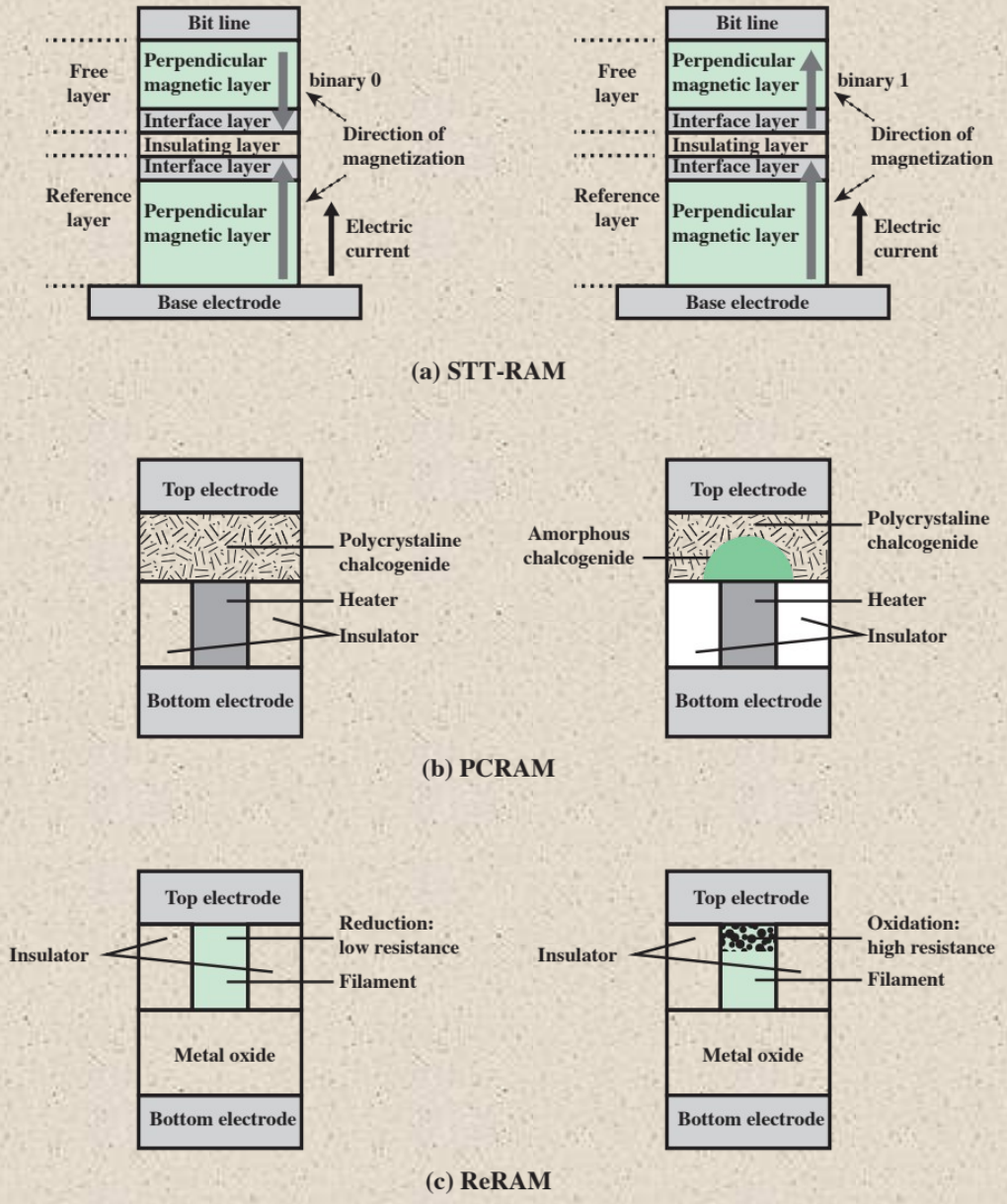

Figure 5.19 Nonvolatile RAM Technologies

© 2016 Pearson Education, Inc., Hoboken, NJ. All rights reserved.

Summary

Chapter 5

Internal Memory

- Semiconductor main memory
  - Organization
  - DRAM and SRAM
  - Types of ROM
  - Chip logic
  - Chip packaging
  - Module organization
  - Interleaved memory
- Error correction
- DDR DRAM
  - Synchronous DRAM
  - DDR SDRAM
- Flash memory
  - Operation
  - NOR and NAND flash memory
- Newer nonvolatile solid-state memory technologies

© 2016 Pearson Education, Inc., Hoboken, NJ. All rights reserved.